Product information

KWB POWERFIRE

Wood chip and pellet heating system

We provide energy for life!

Industrial quality

KWB Powerfire

Wood chip and pellet heating system

130 – 300 kW

Quiet power package for reliable heating

clean EFFICIENCY
Combustion technology

Valuable partnership

We are a quality manufacturer of heating solutions – for this, we use energy from renewable resources. More than 2,000 installers and more than 70,000 customers already put their trust in us by deciding in favour of a KWB partnership.

This "valuable asset" is also an integral component of our company philosophy and the basis of our business relationships. In addition, KWB focuses on appreciation, reliability and a large amount of responsibility for our environment and future generations.

We provide energy for life!

Premium quality "Made in Austria"

Represented internationally

Numerous awards for the factory customer service

More than 70,000 satisfied customers

Our uniqueness sets us apart

Reliable heating

This investment pays off quickly: A heating system with a long service life that saves on energy and fuel costs. In short, a product that makes a difference thanks to well thought out details. You can choose between a stoker container with fire shutter or a stoker container with cellular wheel sluice for the fuel supply.

Lowest energy consumption – fire shutter

The **KWB Powerfire type TDS** is equipped with a level-controlled stoker container which is automatically refilled with wood chips from the storage room. This means that the conveyor system starts up less often and only conveys wood chips when the hopper is empty. This ensures that the heating is evenly refilled with fuel. Thanks to the fire shutter, noise emissions and energy consumption are minimized.

Optional: Combination with cellular wheel sluice possible.

Maximum tolerance – Cellular wheel sluice

The specially formed internal space of the cellular wheel sluice ensures consistently high conveyance volumes even with fuels with low energy content. The optional cellular wheel sluice offers a drop height of **25 cm** and is well-suited for large and long wood chip pieces (G50/P31S).

Economical heating

Heating plant Kallmünz: Top marks thanks to KWB Powerfire

A KWB Powerfire (300 kW) operating in the co-generation plant Kallmünz is one of the most economic biomass heating plants in Germany. According to C.A.R.M.E.N. e. V., it is even the most profitable system of its size.

The biomass heating plant currently heats a retirement home, a home for assisted living, an orphanage, a Schullandheim (temporary residence for students on class trips during term), a large kitchen and a laundry. The system is running so efficiently and reliably, says operator Max Schmalzbauer, because the long-term maintenance contract guarantees continuous care by the KWB factory customer service. Schmalzbauer particularly emphasizes the systems efficiency: "0.8% auxiliary energy, 4,800 full load hours and only € 62.90 / MWh heat generation costs - it does not get any clearer!"

Quiet power package

Due to its special features, the **KWB Powerfire** *is suitable for the heat supply of regional district heating networks, commercial companies as well as multi-storey and residential buildings. The KWB Powerfire is also very flexible with respect to the fuel to be used. Its broad fuel flexibility is very impressive.*

Perfect combustion

Thanks to a revolving grate combustion system with a staged primary air supply as well as a downstream cyclone combustion chamber.

Large drop height

with optional cellular wheel sluice for coarse, long-pieced wood chips (G50 / P31S).

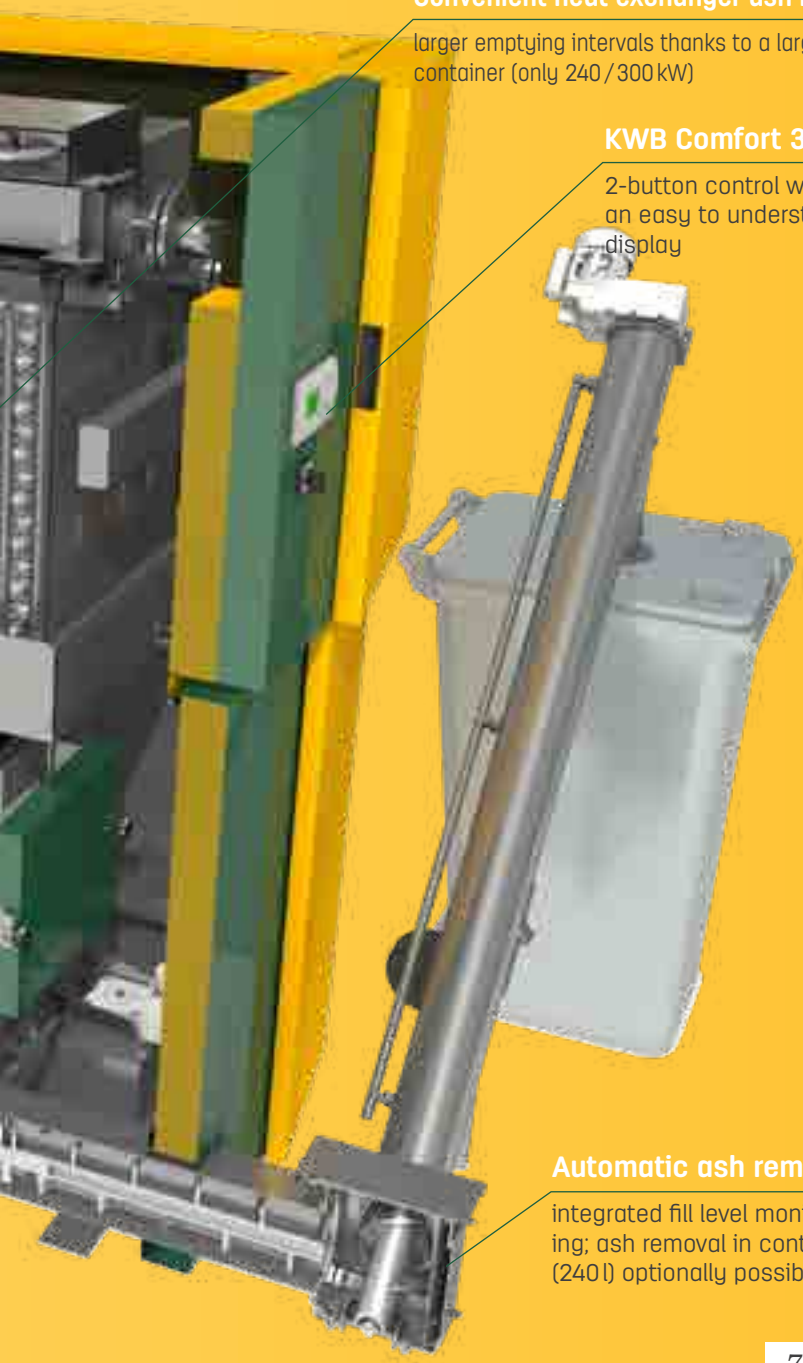

Convenient heat exchanger ash removal

larger emptying intervals thanks to a larger fly ash container (only 240 / 300 kW)

KWB Comfort 3 control

2-button control with dial and an easy to understand graphic display

Automatic ash removal

integrated fill level monitoring; ash removal in container (240 l) optionally possible

Highly efficient tubular heat exchanger

Ensures optimal heat exchanger cleaning, low exhaust temperatures and a consistently high efficiency level.

Exhaust gas circulation

For an optimal level of efficiency, low emissions, guaranteed durable system protection with dry fuels (w < 20%).

Reliable, long service life

KWB Stirrer

The KWB stirrer with conveyor screw on a massive, hollow shaft supported by two bearings, is customized in length and diameter to the specific needs of the customer. Thanks to the robust construction, the conveyor system is also suitable for utilization in large pellet storages (>40 tons). At the same time, the system operates very quietly since no suction conveyor is required even for large distances (up to 12 m).

Broad fuel flexibility

The conveyor system is suitable for wood chips of the categories A1, A2 and B1 up to a particle size of P162 (G30), P31S (G50) in accordance with ISO 17225-4 as well as for the transport of wood pellets of the quality levels A1 and A2 in accordance with ISO 17225-2.

- ✓ **Integrated wall duct box** replaces additional inspection opening.
- ✓ **Maximum utilization of the storage room volume**possible thanks to a horizontal channel construction with a separate ascending screw. The conveyor screw length is customized to the local situation.
- ✓ **switch fuel** without mechanical conversion of the boiler and conveyor system.
- ✓ **Optimal emptying of the fuel storage room** thanks to the uniform contact force of the articulated-blade rotary stirrer over the entire diameter.
- ✓ **Low energy consumption** thanks to reduced frictional resistance in the one-piece screws that have been welded together with ascending pitch and highly efficient gear motors

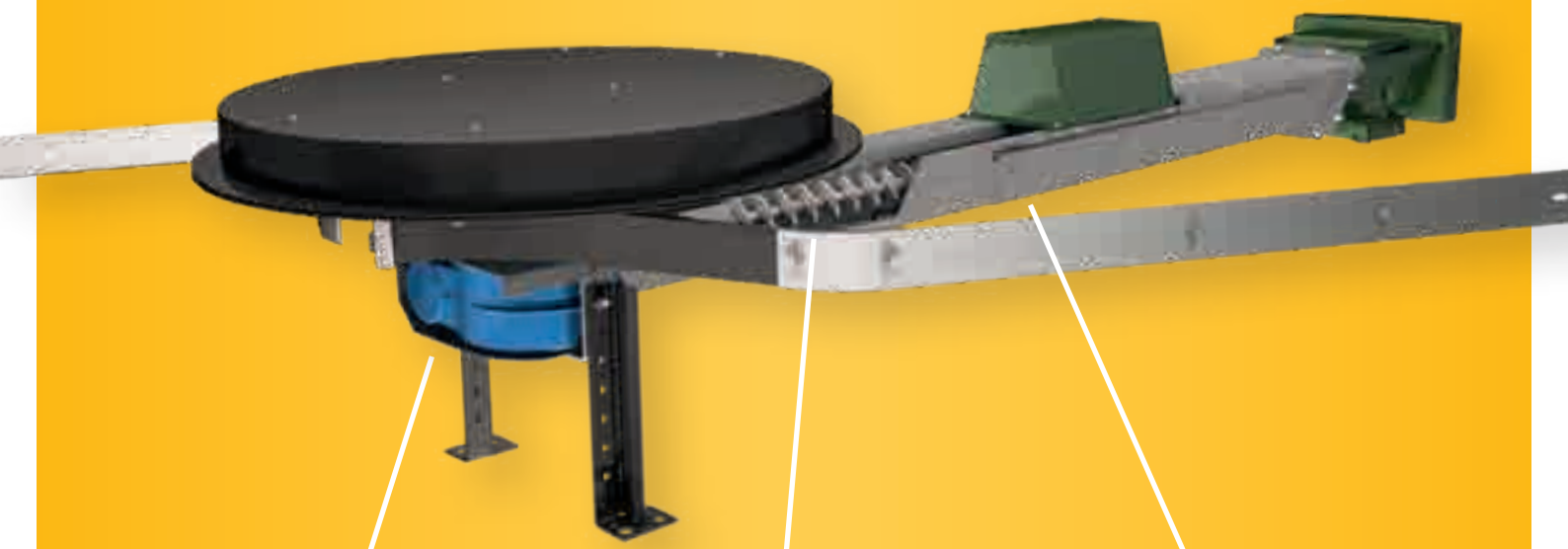

No maintenance expenditures

in the fuel storage room thanks to a sturdy heavy-duty gear.

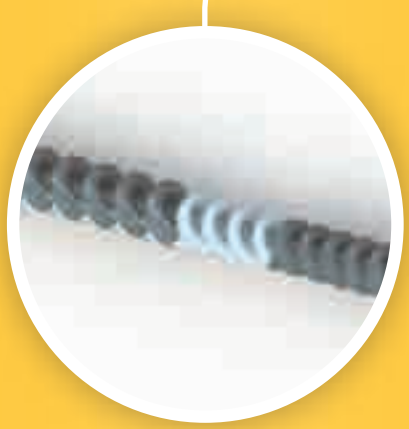

High operating safety

Thanks to a one-piece screw with ascending pitch and stainless steel coil.

Long service life

Thanks to the optimized channel with separate conveyor screw.

Easy operation

KWB Comfort 3 microprocessor control system

KWB Comfort 3 *is a* **modular system** *that is used to operate and regulate KWB biomass heating systems.*

All adjustments can be executed using the 2-button control unit together with a dial on the innovative, easy to understand graphic display. It is also easy to configure the parameters for boiler, heating circuit, DHWC and buffer tank by using the logically structured menu system. The control unit fully automatically and infinitely variable adjusts boiler output according to heat demand from standby to full load. The control concept ensures optimum combustion conditions, lowest emissions and maximum economic efficiency.

In addition to regulating the burner, it also provides comprehensive heat management – from a single family house to a district heating network. As a modular, expandable system, the KWB Comfort 3 makes it possible to control up to 32 heating circuits, 16 buffer tanks and 16 DHWCs.

KWB Comfort Online

The KWB Comfort Online platform enables a simple and comfortable control of the KWB heating system remotely. The Comfort Online platform lets you monitor and control the heating system via smartphone, tablet or laptop/PC from anywhere in the world. For the use of the online connection, the boiler control unit must be upgraded with a KWB network card. You can find further information on the KWB website or at www.comfort-online.com

KWB Comfort SMS

You can query the current operating status and actively control the heating system using your mobile phone (e.g. holiday program, party operation).

In addition to switching the heating system on and off, the operator can query current operating modes or make adjustments to the heating circuits, DHWC, buffer tanks, etc. In addition, alarm messages are sent to the mobile phone. The sender receives acknowledgement of commands that have been executed through a reply by text message (SMS). The generation of commands and queries is simplified trough the use of text message (SMS) templates that can be transmitted to the respective mobile phone by the KWB Comfort 3. KWB Comfort SMS is available in German, English, Italian, French, Spanish and Slovenian.

KWB Comfort InterCom

The KWB Comfort InterCom is an interface that facilitates the data exchange between the KWB Comfort control and external systems.

As, for example, higher level control or regulation systems or building automation systems. The data exchange takes place by means of a serial connection, network connection or analogue modem connection. All boiler operating status parameters as well as individual alarms can be read out on the KWB Comfort control system. In addition, the external system can modify several parameters in the KWB Comfort control system.

Longer emptying intervals

with larger fly ash containers (240 / 300 kW)

With the convenient heat exchanger ash removal, the fly ash containers now need to be emptied only once every four weeks, when using average wood chips, and have been synchronized with the grate ash container.

The heat exchanger ash removal of the KWB Powerfire was completely redesigned to be able to optimally process ash-rich fuels. The time expenditure for removing the ash is minimal and the handling is highly convenient. In the basic version, the fly ash container of the first heat exchanger pass is enlarged and designed as a moveable trolley with a handle. In addition, the convenient design automatically removes the ash in both heat exchanger ducts, optionally to the left or right next to the boiler. Additional benefit: particularly long ash emptying intervals for both versions.

Increased convenience

thanks to twice as long emptying intervals in the convenient design

Fewer costs

thanks to lower maintenance expenditures

High flexibility

For using different fuel qualities

With the KWB Powerfire even wood ships with fluctuating quality can be used as fuel.

Calorific value of different wood types by volume (w=20)

The higher the proportion of kWh to loose cubic meters (srm), the lower the storage room requirement for the fuel. 1 srm corresponds to 0.4 solid measures of timber (fm). The moisture content (w) is the amount of moisture contained in the wood, specified as a % of the green wood.

Twice the energy content with optimal drying

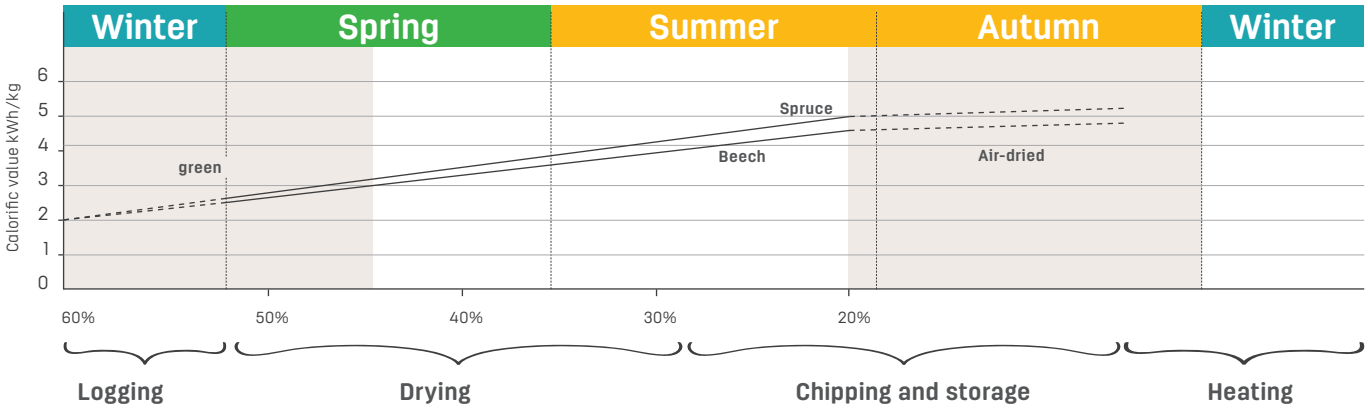

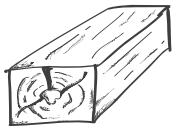

1 solid measure of timber
(fm = 1m³)
Solid wood material

=

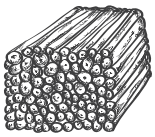

1.4 stacked cubic meter
Log wood

=

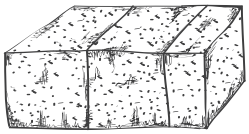

2.5 loose cubic meter (rm)
Wood chips

1 fm beech wood (w=20%) ≈ 292 litres of heating oil	1 fm spruce wood (w=20%) ≈ 210 litres of heating oil

Clean combustion

clean✦EFFICIENCY – *Technology*

The cleanEfficiency label indicates lowest emission values, highest efficiency and low energy consumption as well as a perfect alignment of construction and control elements. The use of cyclone and electrical filter technology is also possible, you can find more detailed information in Technology & Planning biomass heating systems.

Emission values at nominal load

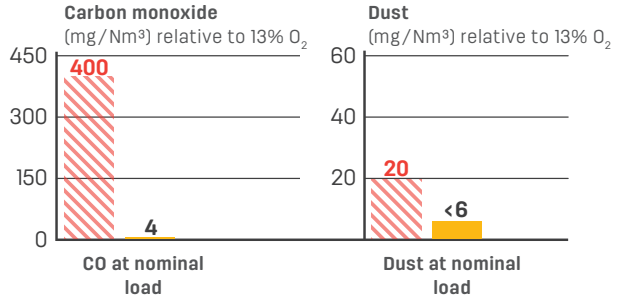

- Emission values KWB Powerfire 150 kW with wood chips (class A1, 13% O_2 with particle separator)
- Legally prescribed emission values, BImSchV Germany, applicable as of 1/1/2015

Quick heat and more efficiency
We recommend using a KWB storage system. This will not only allow you to run your heating cleaner and more efficiently, you will also be able to have heat available quickly when needed.

Easy storage tank dimensioning Optimal: buffer tank volume = 1.5 litres x kW x 400 / K
Minimum: buffer tank volume = 1.0 litres x kW x 400 / K

kW: rated power of the boiler in kilowatt, K: temperature difference between buffer tank charging start/end (t_{Max} - t_{Min}) in Kelvin [K]

Technical specifications

TDS - 09.05.2018	Unit	TDS 130		TDS 150		TDS 200[7]		TDS 240		TDS 300	
		Pellet	Wood chips	Pellet	Wood chips	Pellet	Wood chips	Pellet	Wood chips	Pellet	Wood chips
Rated power	kW	130	130	150	150	199	199	245	245	300	300
Partial load	kW	39,0	39,0	45,0	45,0	59,7	59,7	73,5	73,5	73,5	73,5
Boiler efficiency at rated power	%	91,9	91,0	93,2	92,5	93,7	93,9	93,8	92,7	94,4	92,9
Boiler efficiency at partial load	%	91,6	90,6	92,1	92,4	91,6	91,8	93,4	91,8	93,4	91,8
Fuel thermal output at rated power	kW	141	143	161	162	212	212	261	264	318	323
Fuel thermal output at partial load	kW	43	43	49	49	65	65	79	80	79	80
Boiler class according to EN 303-5:2012	–	5	3	5	5	4	4	5	5	5	5
Flue-gas side (data for chimney design)											
Exhaust-gas connection height (boiler side)	mm	1.615	1.615	1.615	1.615	–	–	–	–	–	–
Exhaust-gas connection height: variant up	mm	–	–	–	–	1.970	1.970	1.970	1.970	1.970	1.970
Exhaust-gas connection height: variant right (pipe centre, 0–90° pivoting) [8]	mm	–	–	–	–	1.380	1.380	1.380	1.380	1.380	1.380
Exhaust-gas connection diameter	mm	250	250	250	250	300	300	300	300	300	300
Ash											
Ash-container volume – fly-ash	l	23	23	23	23	20+44	20+44	20+44	20+44	20+44	20+44
Ash-container volume – grate-ash	l	66	66	66	66	66	66	66	66	66	66
Ash-container volume, comfort version (optional)	l	–	–	–	–	66+125	66+125	66+125	66+125	66+125	66+125
Ash-container volume (optional)	l	240	240	240	240	240	240	240	240	240	240
Electrical system											
Connection: 5-pin	–	400 V_{AC} 50 Hz 16 A	400 V_{AC} 50 Hz 16 A	400 V_{AC} 50 Hz 16 A	400 V_{AC} 50 Hz 16 A	400 V_{AC} 50 Hz 16 A	400 V_{AC} 50 Hz 16 A	400 V_{AC} 50 Hz 16 A	400 V_{AC} 50 Hz 16 A	400 V_{AC} 50 Hz 16 A	400 V_{AC} 50 Hz 16 A
Weights											
Heat exchanger incl. cleaning grille	kg	725	725	725	725	900	900	900	900	900	900
Burner housing incl. chamotte	kg	796	796	796	796	866	866	866	866	866	866
Flame pipe incl. chamotte	kg	–	–	–	–	965	965	965	965	965	965
Stoker trough	kg	113	113	113	113	137	137	137	137	137	137
Total weight (empty)	kg	1.634	1.634	1.634	1.634	2.868	2.868	2.868	2.868	2.868	2.868

7 ... Only available in the UK

8 ... Values only for standard-boiler-configuration. NOT for cellular wheel sluice, cyclone or E-Filter (own dimensioned drawings)

Note: You can find detailed technical specifications on the KWB Powerfire product pages of our websites.

Low space requirements

The KWB Powerfire wood chip and pellet heatings can be installed even at a low room height of 2.4 m. The heating system can be maintained from below.

TDS 130 / 150 kW

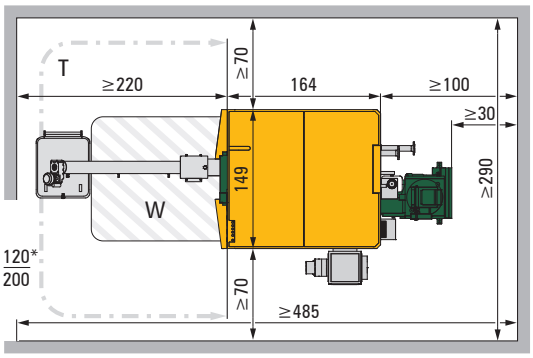

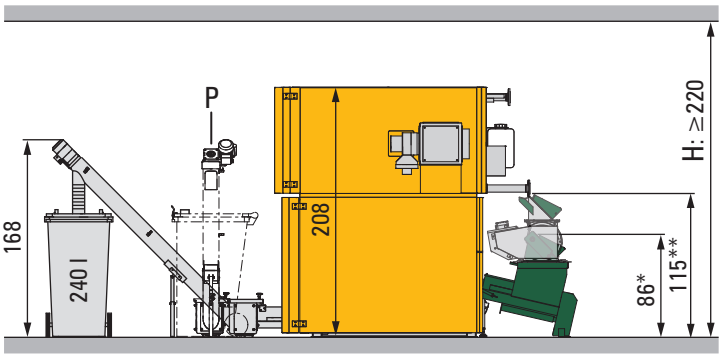

Heating room 130 / 150 kW: between 10.7 m² to 18 m²

TDS 240 / 300 kW

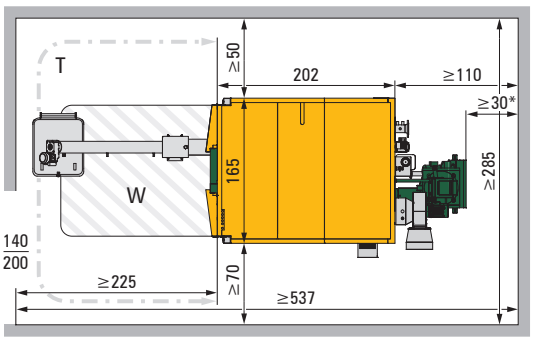

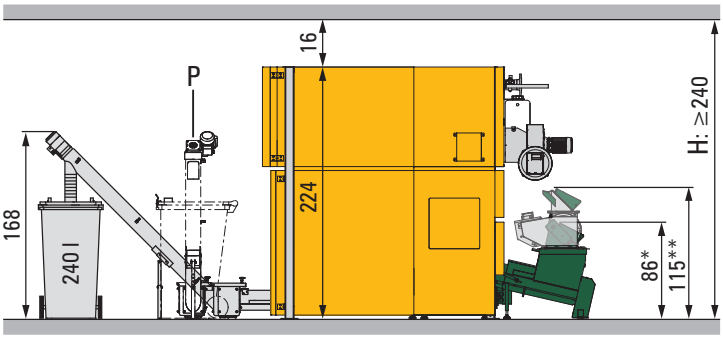

Heating room 240 / 300 kW: between 12.2 m² to 21.3 m²

* Fire shutter ** Cellular wheel sluice

[cm]		TDS 130 / 150 kW	TDS 240 / 300 kW
T	If the maintenance area (W) through the door is ensured (with standard ash container)	≥ 105	≥ 116
T	External ash extraction in 240 l ton, straight	≥ 220	≥ 225
P	External ash extraction in 240 l ton, 90°	≥ 170	≥ 170
H	Room height: For room heights below 280 cm, the customer must provide suitable lifting tools (electrical forklift, wheel front loader, etc.).	> 220	> 240

Room minimum dimensions TDS 130 / 150 kW

Minimum room dimensions of the built-in ash container variants (cm)				
	Ash-container position			
	Left	Right	Front	Internal
Room width (B)	340	320	290	290
Room length (L)	435	435	485	435
Room height (H)	220	220	220	220

Room minimum dimensions TDS 240 / 300 kW

Minimum room dimensions of the built-in ash container variants (cm)				
	Ash-container position			
	Left	Right	Front	Internal
Room width (B)	360	285	285	285
Room length (L)	487	537	507	428
Room height (H)	240	240	240	240

All dimensions in cm l Width x Height l Distances stated are minimum!
Information regarding the hydraulics requirements can be found in the Technology and Planning document.

Clear and simple assembly

KWB's modular Assembly System

All KWB systems can be dismantled into several modules, which allows our products to be placed in almost every heating room and easily installed even in tight spaces. We call it the **KWB modular assembly system.**

You can schedule less time
because your technician can move the heating system into the heating room more quickly.

Simplified construction site coordination,
since your technician does not require expensive installation aids.

The reduced weight of the individual pieces
makes them less likely to scratch any surfaces thereby preserving and protecting the space.

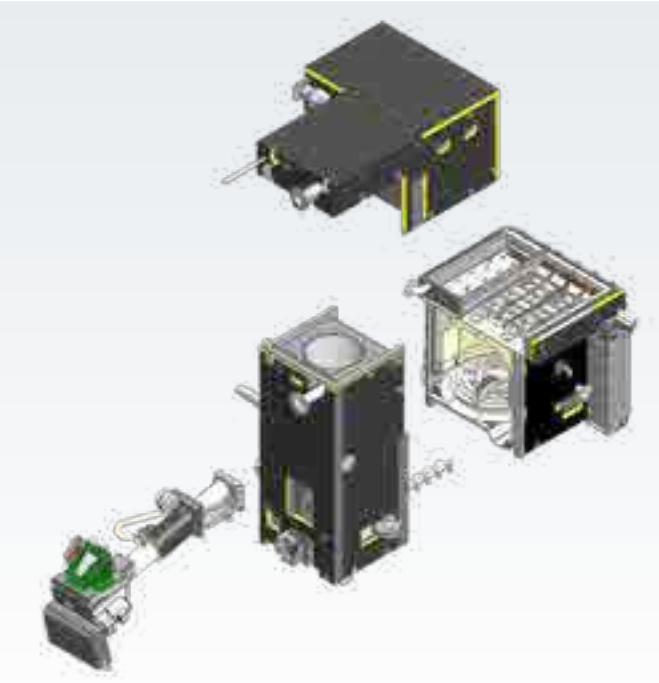

KWB Powerfire – boiler can be dismantled into 3 parts (130/150 kW), as of 240 kW it can be dismantled in 4 parts.

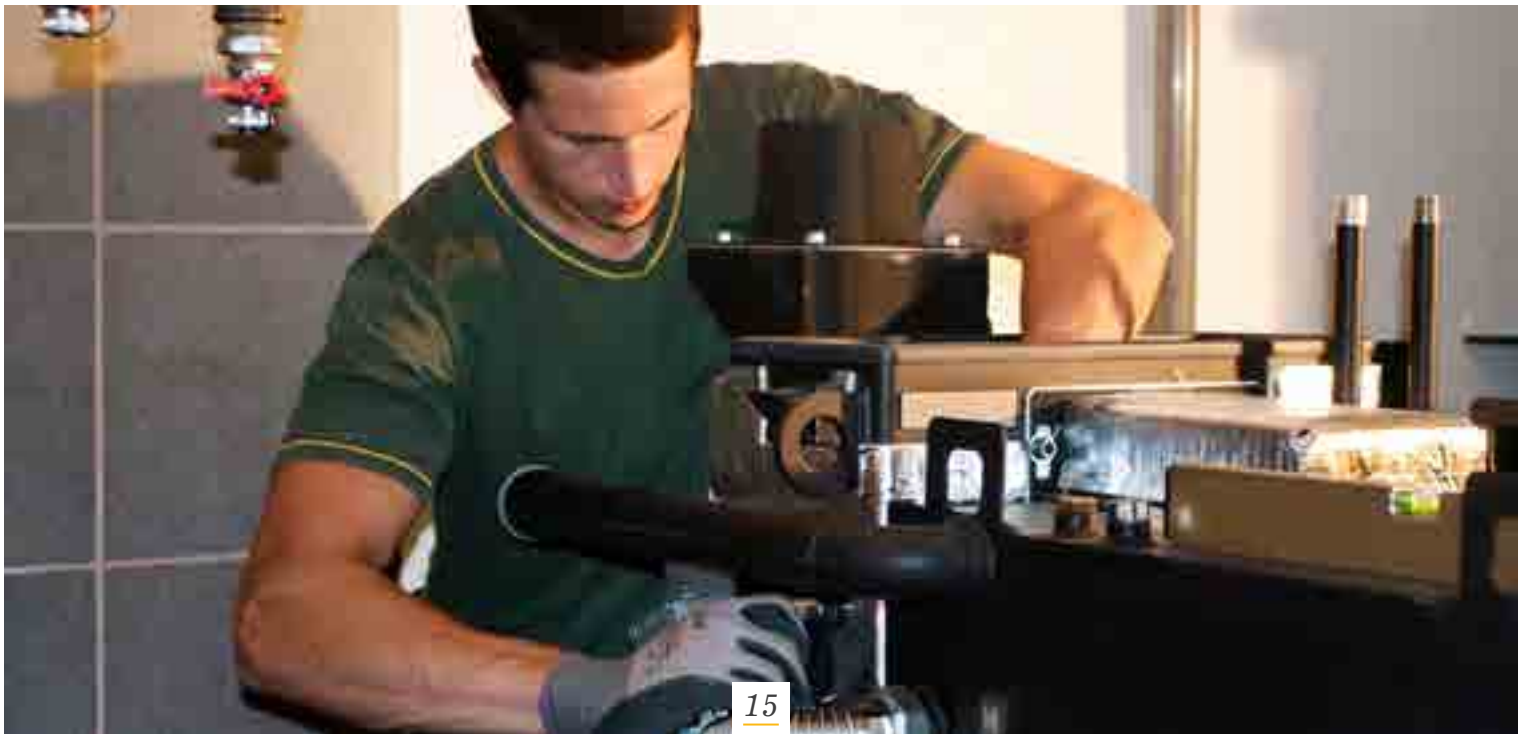

KWB Partner

CONTACT US

Your KWB Partner will be happy to help you if you have any questions or other requests. If you would like to contact KWB directly, you will find your local contacts here. We look forward to hearing from you!

Scotland	+44 1330 826 504	www.kwb-heating.co.uk	info@originalheating.com
North England	+44 1524 784 323	www.kwb-heating.co.uk	care@sustaburn.co.uk
Central England and Wales	+44 1162 604 050	www.kwb-heating.co.uk	info@ashwellbiomass.com
South England	+44 1271 372 888	www.kwb-heating.co.uk	info@optimumheating.co.uk
Ireland and Northern Ireland	+44 2871 353 108	www.kwb.ie	info@originalheating.com
Danmark	+45 40 56 51 38	www.lwbioenergi.dk	info@lwbioenergi.dk
Norway	+47 69 22 53 00	www.bye.no	bye@bye.no
Sweden	+46 498 201750	www.gotfire.se	info@gotfire.se
Finland	+358 9 50991	www.algoltechnics.fi	info.technics.fi@algol.fi
Canada	+1 450 6 411 344	www.kwb-canada.ca	info@esys-energie.com
Japan	+81 3 4405 8088	www.kwb.net	info@wbenergy.co.jp

DISCOVER KWB UP CLOSE AND PERSONAL

... at one of more than 70,000 satisfied customers! You will find reference customers on our website.

"Good friends recommended KWB to me, which made me trust them immediately!"

PI Powerfire TDS 2018 EN | Index 0 | 2018-05

21-2002002